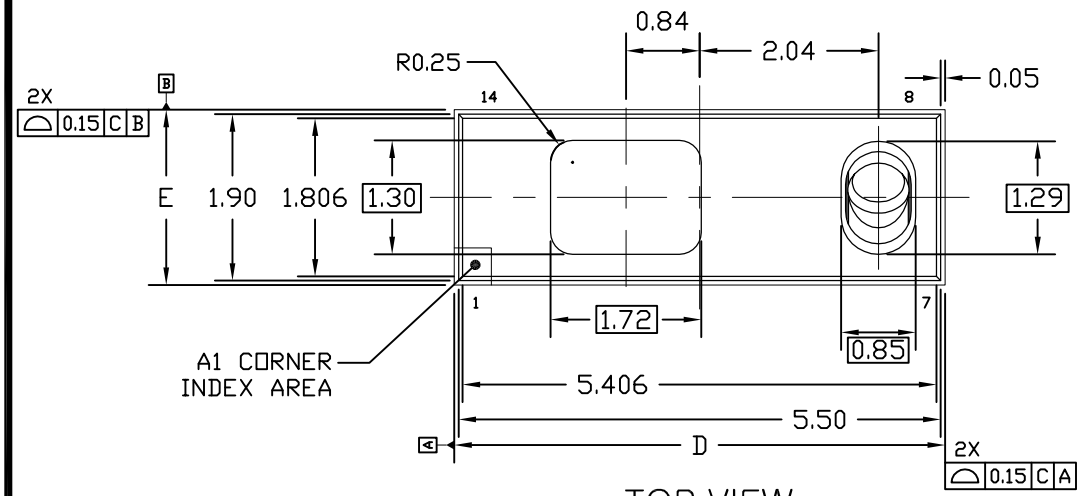

TOP VIEW

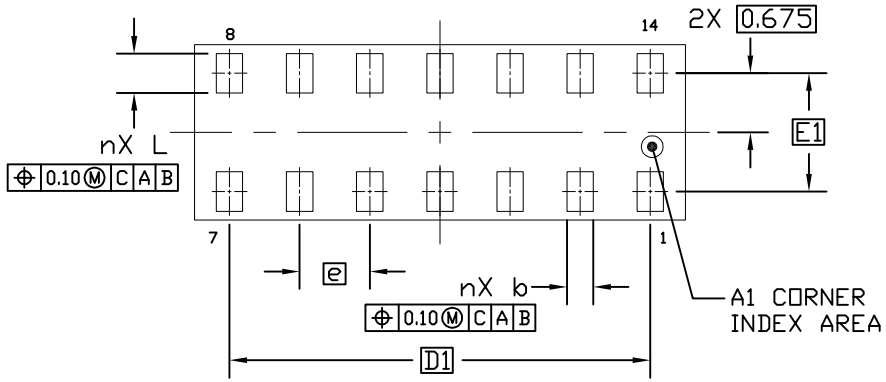

BOTTOM VIEW

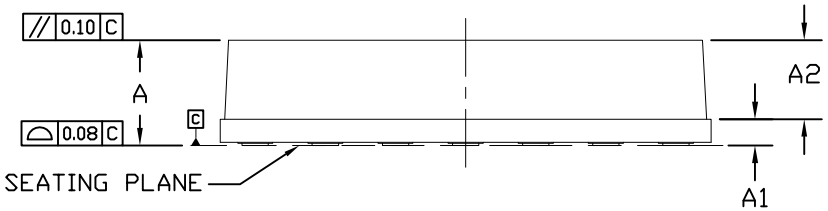

SIDE VIEW

Symbol	MIN	NOM	MAX
A	1.10	1.20	1.30
A1	0.3 REF.		
A2	0.9 REF.		
b	0.25	0.30	0.35
D	5.50	5.60	5.70
D1	4.80 BSC		
E	1.90	2.00	2.10
E1	1.35 BSC		
e	0.8 BSC		
L	0.40	0.45	0.50
n	14		
aaa	0.1		
ddd	0.08		

NOTES:

1. ALL DIMENSIONS ARE IN MILLIMETERS. ANGLES ARE IN DEGREES.
2. DIMENSIONING & TOLERANCING CONFORM TO ASME Y14.5M-1994.
3. N IS THE TOTAL NUMBER OF TERMINALS.
4. NO BURR AND NO OIL ALLOWED
5. GENERAL TOLERANCE: ±0.1
6. MATERIAL MUST BE COMPLIANT WITH MAXIM SPECIFICATION 10-0131 FOR SUBSTANCE CONTENT, MUST BE Eu ROHS COMPLIANT WITHOUT EXEMPTION AND PB-FREE.
7. ALL DIMENSIONS APPLY TO Pb FREE (+) PARTS.
8. PACKAGE CODE: F142B5+2

-DRAWING NOT TO SCALE-

maxim integrated™

TITLE:
PACKAGE OUTLINE, 14L
OPTICAL LGA, 2.0x5.6x1.2mm

APPROVAL	DOCUMENT CONTROL NO.	REV.	
KEVIN LIM 09/18/13	21-0737	A	1/1