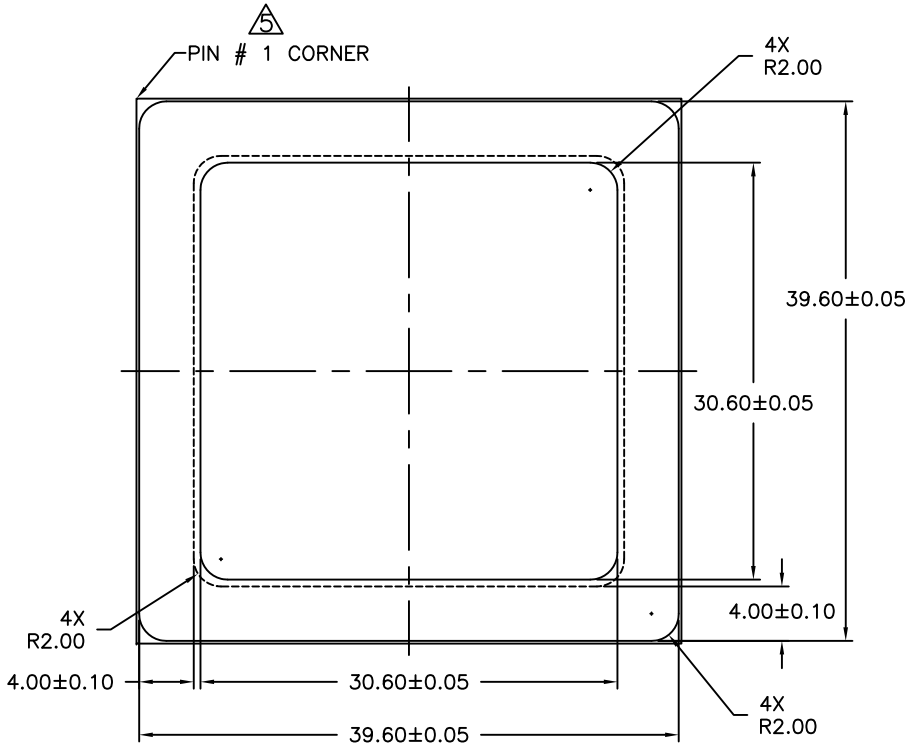

TOP VIEW

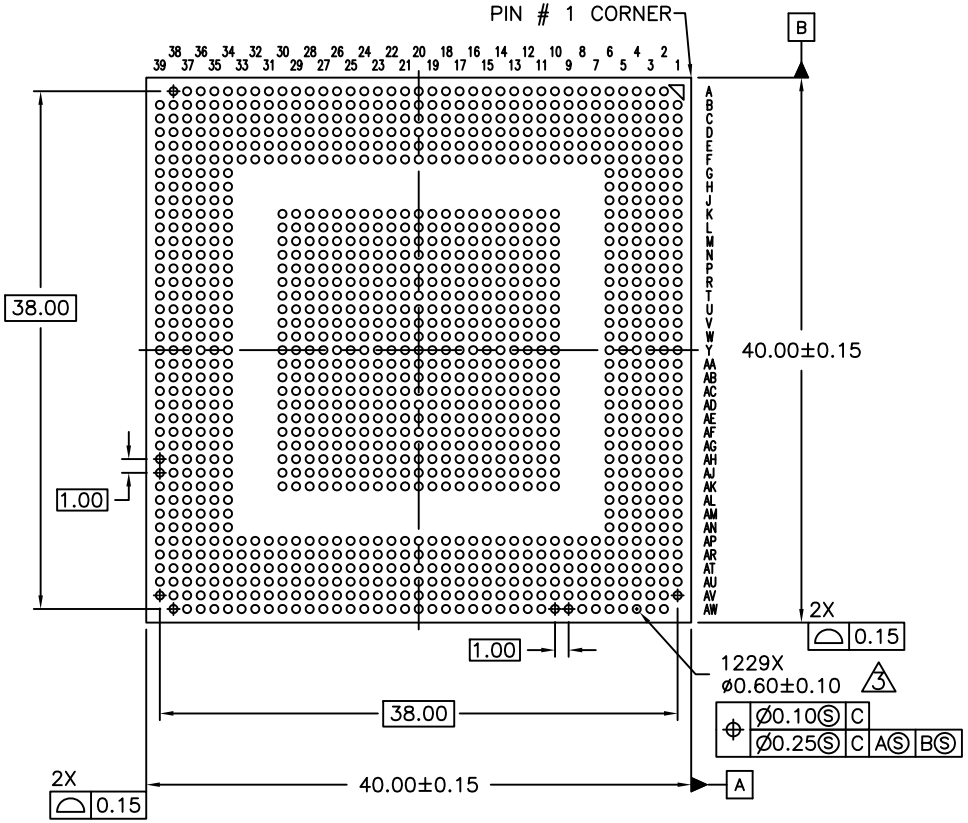

BOTTOM VIEW

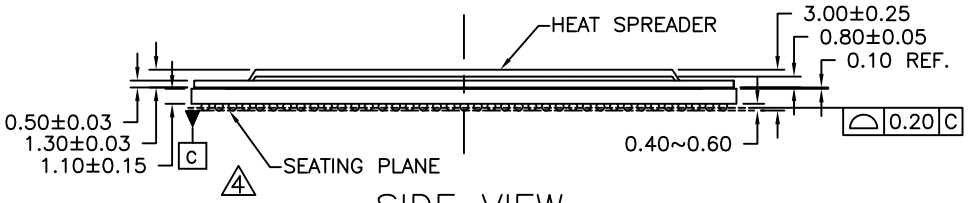

SIDE VIEW

NOTES:

1. ALL DIMENSIONS ARE IN MILLIMETERS UNLESS OTHERWISE SPECIFIED.
2. THE BASIC SOLDER BALL GRID PITCH IS 1.00 MM AND BALL DIA IS 0.60MM.
3. DIMENSION IS MEASURED AT THE MAXIMUM SOLDER BALL DIAMETER PARALLEL TO PRIMARY DATUM C.
4. PRIMARY DATUM C AND SEATING PLANES ARE DEFINED BY THE SPHERICAL CROWNS OF THE SOLDER BALLS.
5. A1 BALL PAD CORNER ID
6. MATERIAL MUST COMPLY WITH BANNED AND RESTRICTED SUBSTANCES SPEC # 10-0131.
7. ALL DIMENSIONS APPLY TO LEADED (-), LEADFREE (+) AND ROHS EXEMPT (#) PKG. CODES.
8. PKG CODES: X1229FH-1/#1, X1229HF-1.

-DRAWING NOT TO SCALE-

maxim integrated™

TITLE:
PACKAGE OUTLINE, 1229 BALLS HSBGAF, 40x40x2.6mm, 1.0mm PITCH, 6 LAYERS

APPROVAL	DOCUMENT CONTROL NO.	REV.	
EDEN CHEN 10/28/14	21-0436	E	1/1