LED DRIVERS FOR GENERAL LIGHTING

Design Guide

www.maximintegrated.com/led-drivers

maxim integrated™

Table of Contents

Introduction

LEDs have proliferated through countless residential, commercial, industrial, and automotive applications and across all markets over the course of this decade (*Figure 1*). As the LED market has reached economies of scale, applications once dominated by traditional incandescent lighting are now utilizing the many key features of LED technology—high efficiency, high brightness, precise control of light, vast arrays of colors, unique shapes in conjunction with new optics, and more. LED illumination rise-time is twice as fast as incandescent sources and consumes less power than its incandescent counterpart, leading to substantial advantages in energy consumption.

The sizeable LED lighting market is estimated to be $56.6 billion by 2023 **(source LED Inside)**. Improvements to LEDs and LED drivers allow for applications that were not traditionally possible and help adaptation to new market needs. **Industrial and stage lighting** provides high-contrast, bright, and colorful systems for illuminating the factory or the stage. **Horticulture lighting** utilizes highly efficient designs at various color spectrums to effectively grow high-yielding plants (*Figure 2*). **Machine vision systems** require sophisticated camera systems that employ infrared or high-brightness LEDS (HB LEDs). **IoT lighting** creates smart and well-lit applications that bring comfort and simplicity to its users. **Automotive lighting** enables a stylish, customizable, and safe environment using exterior lighting and interior lighting systems.

These are only a few applications that require an LED paired with an LED driver. LED drivers, the electronics that operate LEDs, play an important part in preserving and enhancing the inherent LED qualities of clarity, speed, and efficiency. At Maxim, we are focused on delivering high-efficiency, compact, flexible, and low-electromagnetic interference (EMI) LED drivers for these growing market segments.

Powering the LEDs

LEDs have many general lighting applications and are used in diverse configurations from a single LED to a string or matrix of LEDs. HB LEDs require constant current for optimal performance. The current correlates with junction temperature and hence color. Accordingly, HB LEDs must be driven with current, not voltage. The power source can range from an AC/DC power adapter for building illumination to a few AAA batteries for closet lights and other household devices.

The Challenges

The proliferation of LED modules in general lighting places new requirements on system hardware including: reduced EMI, reduced component size to fit additional electronics within the same space, improved energy efficiency to perform within the same or lower thermal budget, supporting connected and flexible architectures that enable multiple configurations, as well as accurate control to preserve LED light characteristics.

In the following sections, we will discuss eight case studies that address the challenges for the following applications:

1. High-power LED lighting
2. Low-/mid-power LED lighting
3. Infrared (IR) diodes for vision systems
4. Low-power LED lighting

Figure 1. City of Shenzhen Lit by LEDs

Challenge 1
High-Power LED Lighting

Case Study I: Improve General LED Lighting with Buck-Boost Average Current Control

In line-operated applications, a switched string of diodes can be fully engaged with 12 LED diodes (42V) or dimmed down to a single LED diode (3.5V). The LED driver may have an input voltage of 24V, while its output voltage may go from 3.5V to 42V and be above or below the input at any given time.

In battery-operated applications like closet lighting and other household applications, the power source can come from a few AAA batteries, with wide input voltage swings.

In this section, we review the challenges of efficiently powering switched LED strings in the presence of variable LED driver input and/or output voltages and will propose a novel buck-boost, average current control solution that overcomes these challenges.

Figure 2. LED-Powered Agriculture

Typical LED Panel System

Typical LED panels (***Figure 2***) take power from a separate AC/DC power-supply brick (***Figure 3***). The power brick delivers a standard DC voltage, for example 24V. Dedicated buck-boost converters, working from this power-brick input, control the lamp's intensity and position. Each buck-boost converter controls a single function such as daytime or nighttime lights, and light position, etc. The matrix manager switches the string diodes in or out, with each buck converter's output adjusted accordingly.

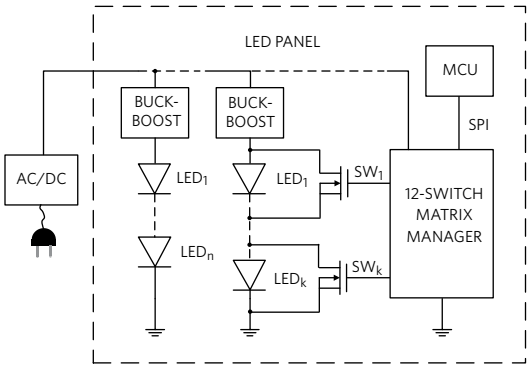

Figure 3. LED Panel System from an AC/DC Power-Supply Brick

Ideally, each string will have a customized buck-boost solution, where the string voltage is directly derived from the power brick with a step-down conversion, when possible (buck mode), and a step-up conversion, when necessary. With an input voltage as low as possible, the system switching losses are reduced and efficiency is improved.

Another concern is current and voltage accuracy. The typical peak or valley current-mode buck converter controls the inductor peak current. However, the diode string current is the average current in the inductor. This peak-to-average current error is eventually eliminated by the outer voltage control loop but returns during transient conditions. For example, in *Figure 3*, the matrix manager may instantly raise the number of powered-up diodes from eight to twelve. The resulting output voltage step produces a current and voltage fluctuation at the output of the buck converter that takes tens of microseconds to extinguish. A high-ratio PWM dimming circuit will sample this current for only a few initial microseconds where the amplitude is dipping, resulting in incorrect dimming brightness and color. A control loop that measures average current, as opposed to peak current, would naturally eliminate this problem.

Dimming

Dimming is a ubiquitous function in many applications and an important safety feature for LED headlights. The human eye can barely detect light dimming from 100% to 50%. Dimming must go down to 1% or less to be clearly discernable. With this in mind, it is not surprising that dimming is specified by a ratio of 1000:1 or higher. Given that the human eye, under proper conditions, can sense a single photon, there is practically no limit to this function.

Since current must be kept constant to preserve color, the best dimming strategy for LEDs is pulse-width modulation (PWM), where the light intensity is modulated by time-slicing the current rather than by changing the amplitude. The PWM frequency must be kept above 200Hz to prevent the human eye from perceiving the LED light as flickering.

Shunt Dimming

With PWM dimming, the limit to the minimum LED "on/off" time is the time it takes to ramp up/down the current in the switching regulator inductor. This may add up to tens of microseconds of response time, which is too slow for applications that require fast, complex dimming patterns. Dimming in this case can only be performed by individually shunting each LED in a string by means of dedicated MOSFET switches (SW1-K in *Figure 3*). The challenge for the current control loop is to be fast enough to quickly recover from the output voltage transient due to switching in and out of the diodes.

Synchronous High-Power Buck-Boost LED Driver Solution

An ideal solution should meet the requirements of smooth buck-boost operation and fast transient response. The LED controller shown in ***Figure 4*** enables such a solution.

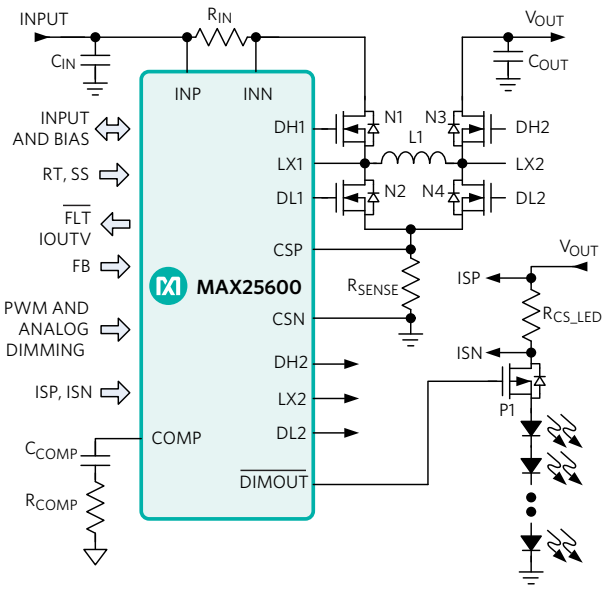

Figure 4. LED Controller with Smooth Buck-Boost Operation and Fast Transient Response

Typically, the diode string is attached directly to V_{OUT}. The IC integrates a high-side p-channel dimming MOSFET driver ($\overline{DIMOUT}$) for applications that require a current source with PWM dimming capability as shown in *Figure 4*.

Buck-Boost Operation

Table 1 shows buck-boost operation in buck (step-down) and boost (step-up) modes.

Table 1. Buck-Boost Operation

	N1	N2	N3	N4
Step-Down	Switch	Switch/	On	Off
Step-Up	On	Off	Switch/	Switch

When $V_{IN} > V_{OUT}$, the IC regulates in buck mode, with N1 and N2 switching synchronously. When $V_{IN} < V_{OUT}$, the IC regulates in boost mode, with N3 and N4 switching synchronously.

Smooth Transition

The critical aspect of buck-boost architecture is the smooth transition from one mode of operation to the other, when the regulator input and the output voltages are close in value.

In the transition from buck to buck-boost operation, as the input drops closer to the output, the converter's duty cycle approaches unity. Namely, the 'on' time of N1 gets longer, while the 'on' time of N2 gets shorter. At some point, the N2 power transistor may not turn on fast enough within its allowed 'on' time, leading to discontinuities in the output voltage and current. Even if N1 and N2 were fast enough, the transistors N3 and N4 are in the 'off' state during buck mode and, when called to duty, have a turn-on delay due to the respective charge pumps (not shown), which require time to get back into operation.

The best strategy then is to anticipate the introduction of boost operation at a time when the buck operation is far from its operational limit. For example, in buck mode, when the N2 duty cycle reaches about 15%, the boost pair (N3 and N4) is called to duty. The boost operation (CLK2) is 180° out-of-phase with buck operation (CLK1). The mode transition causes the duty cycle of N2 to readjust upward to about 30%, resulting in the waveforms illustrated in *Figure 5*.

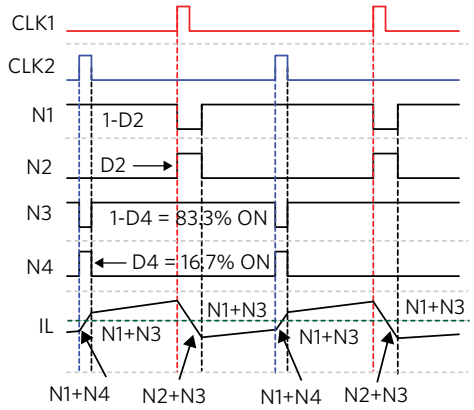

Figure 5. Buck-Boost Operation coming from Buck Mode

Accordingly, as the buck DC1 approaches 83.3%, the two boost transistors (N3 and N4) kick into action. Looking at the current waveform, we see that by equalizing volt x seconds, we have:

$$V_{IN} \times T_{ON4} + (V_{IN} - V_{OUT}) \times (T_{ON1} - T_{ON4}) = V_{OUT} \times T_{OFF1}$$

By reordering and simplifying, we obtain the characteristic equation of a four-switch buck-boost converter:

$$V_{OUT}/V_{IN} = {}^{DC1}/_{1 - DC4}$$

where $DCx = T_{ONx}/T$.

Fast Fixed-Frequency (F^3) Architecture

As discussed earlier, a control loop that measures average current is free from peak-to-average current error, leading to a superior transient response. *Figure 6* shows the simplified average current control scheme implemented by the IC in buck operation.

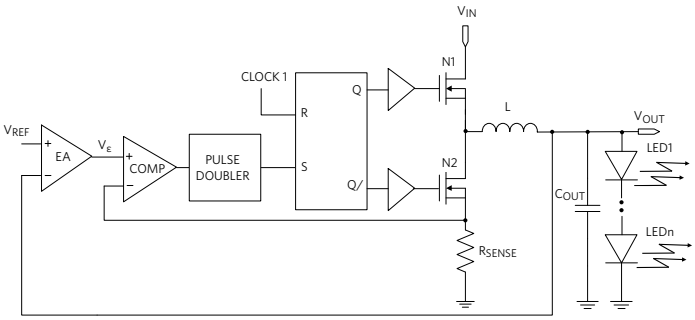

Figure 6. Average Current Control in Buck Mode

In this scheme, the pulse t_{pw} (*Figure 7*), between the turn-off of N1 and the time $R_{SENSE} \times I_L$ hits Vε, is measured. A delay equal to t_{pw} is introduced before the turn-on of N1 by the pulse doubler. Hence, the error voltage, Vε, comes to represent exactly the average current Iav.

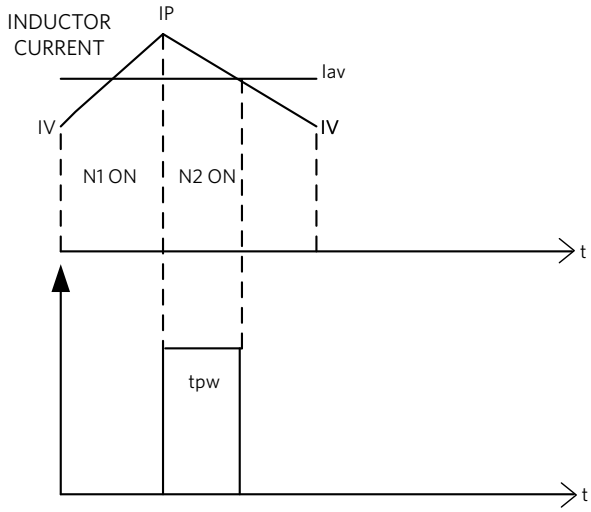

Figure 7. Pulse Doubler

Naturally, the same strategy is adopted in boost mode. Average current mode ultimately results in higher fidelity of LED brightness and color.

Other Features

The IC controls LED string voltages from 0 to 60V and provides both analog and digital PWM dimming. It has built-in analog PWM dimming at a 200Hz dimming frequency. The device allows adjustable 200kHz to 700kHz fixed-frequency operation. In addition, ±6% triangular spread spectrum is internally added to the oscillator to improve EMI performance. A fault flag indicates open LED, shorted LED, or thermal shutdown conditions. The adjustable soft-start feature limits the current peaks and voltage overshoots at startup. It also features robust output, open, and short protection.

12-Matrix Switch Manager

The 12-matrix switch manager can be implemented by the **MAX20092.** The IC features a serial peripheral interface (SPI) for serial communication. The MAX20092 is a slave device that uses SPI to communicate with an external microcontroller (µC), which is the master device. Each of the 12 switches can be independently programmed to bypass the LEDs across each of the switches in the string. Each switch can be turned fully on, fully off, or dimmed with or without fade-transition mode. The PWM frequency is set by an internal oscillator or set to an external clock source. The IC features open-LED protection as well as open- and short-LED fault reporting through the SPI. With open trace protection, if the trace (located between the MOSFET drain or the source) is disconnected from the LED, a fault will trigger. The MAX20092 is available in a compact 32-pin (5mm x 5mm) side-wettable TQFN (SWTQFN) package with a thermally enhanced exposed pad.

Conclusion

Implementing high-power LED lighting poses challenges in terms of switching losses, affecting power efficiency and accurate current control, which then affects LED color and brightness. We introduced a new LED controller IC, which, thanks to smooth buck-boost operation, minimizes system losses while its average current control enhances transient response, therefore preserving LED color and brightness.

Case Study II: Achieve Superior Lighting with a High-Power Buck LED Controller

Buck converters (a.k.a. direct energy devices), thanks to their uninterrupted current flow from the inductor to the output, are inherently more efficient than boost and buck-boost converters. Naturally, the use of a buck converter implies that the output voltage is always lower than the input voltage. Whenever possible, based on the characteristics of the application, the use of buck converters results in more efficient lighting fixtures (*Figure 8*).

This case study reviews a typical LED power management solution and presents a novel buck controller IC that enables a fast, efficient, and accurate LED lighting solution.

Figure 8. LED-Powered Ceiling Lighting

Typical High-Power Buck LED Driver Solution

A typical buck LED driver solution is shown in *Figure 9*. It uses a p-channel, high-side MOSFET, with relatively high $R_{DS(ON)}$ compared to an n-channel transistor, and a nonsynchronous architecture that relies on the Schottky diode D for current recirculation. Both are sure signs of an inefficient implementation.

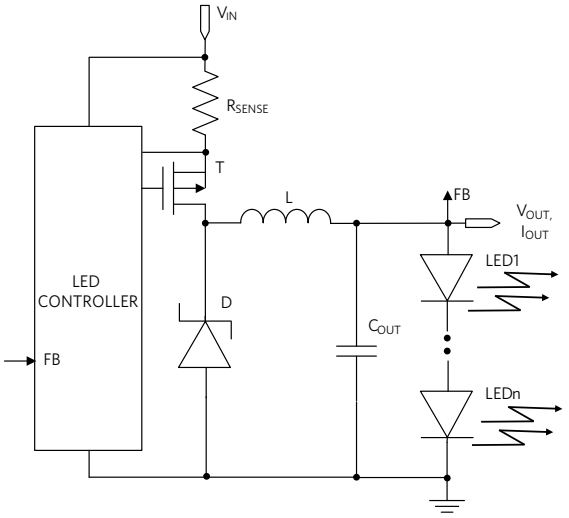

Figure 9. Typical Nonsynchronous Buck LED Driver

Typical Transient Response

Figure 10 shows another shortcoming of a typical solution in its transient response. In this test, in a string of 12 LEDs, the number of powered-up diodes has instantly risen from eight to twelve. The resulting output voltage step produces a current and voltage fluctuation that takes tens of microseconds to extinguish. A high-ratio PWM dimming circuit will sample this current for only a few initial microseconds where the amplitude is dipping, resulting in incorrect dimming brightness and color.

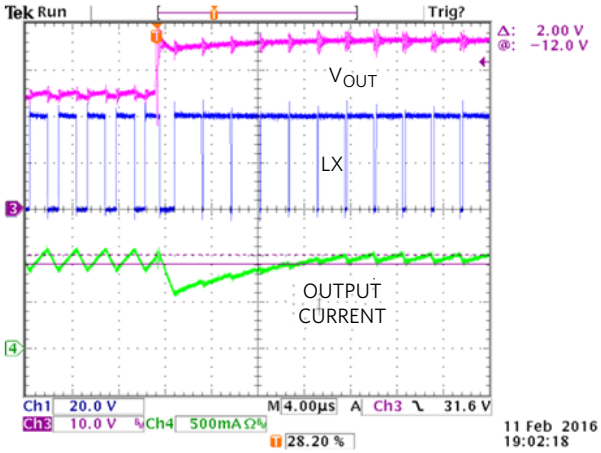

Figure 10. Typical Transient Response with Hysteretic Buck

Synchronous High-Power Buck LED Driver Solution

An ideal solution should meet the requirements of a wide input voltage range, fast transient response, high and well-controlled switching frequency, all while enabling high efficiency with synchronous rectification. The **MAX20078** LED controller provides such a solution (*Figure 11*).

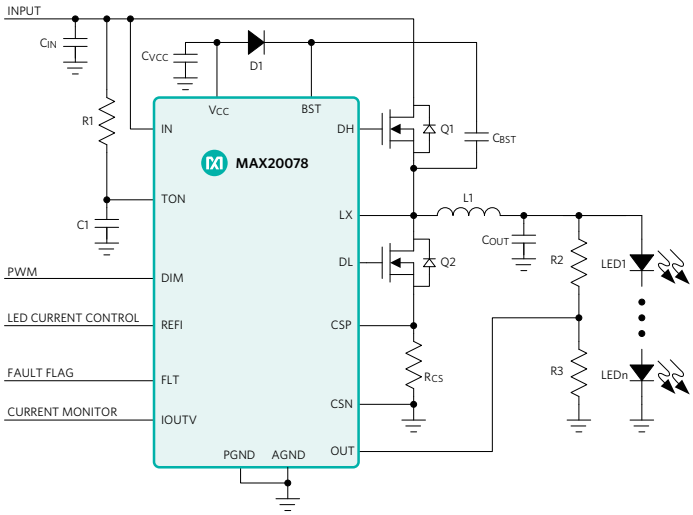

Figure 11. Synchronous High-Power Buck LED Driver

The MAX20078 LED controller uses a proprietary average current-mode-control scheme (F^3 architecture) to regulate the inductor current while maintaining a nearly constant switching frequency. It operates over a wide 4.5V to 65V input range at switching frequencies up to 1MHz and includes both analog and PWM dimming. It is available in a space-saving (3mm x 3mm) 16-pin TQFN (regular or SW) or a 16-pin TSSOP package.

High Efficiency

Figure 12 shows the MAX20078 LED driver's efficiency versus supply voltage. Two 107mΩ synchronous rectification MOSFET transistors provide high efficiency over a wide range of supply voltages.

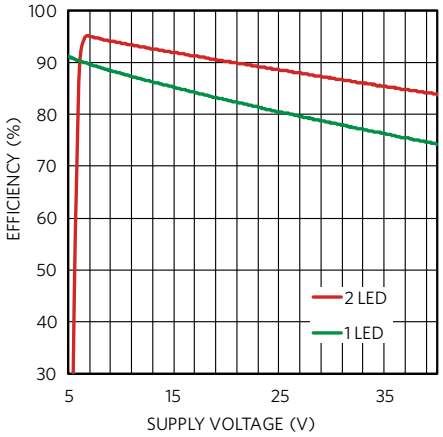

Figure 12. MAX20078 Efficiency vs. Supply Voltage

Accurate Light Intensity Control

The proprietary architecture of the MAX20078 yields a transient response that is virtually error-free compared to that shown in *Figure 9*. In ***Figure 13***, the increase in the number of diodes from eight to twelve does not produce any appreciable fluctuation in the output voltage or current.

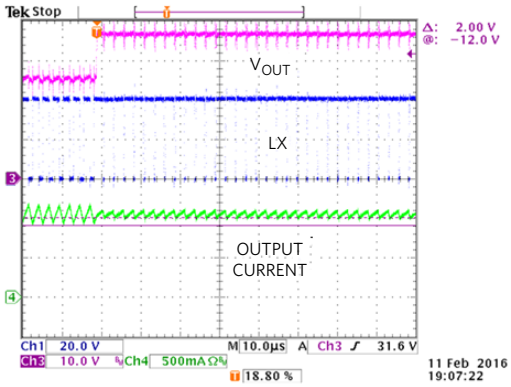

Figure 13. MAX20078 Transient Response

Accordingly, the MAX20078, in combination with shunt dimming, can deliver very accurate and narrow pulses, achieving the high dimming ratios required for stage lighting applications.

High Frequency of Operation

The on-time of the MAX20078 can be programmed for switching frequencies ranging from 100kHz to 1MHz. Its on-time varies in proportion to both input voltage and output voltage, resulting in a switching frequency that is virtually constant. A high and well-controlled switching frequency, outside the AM frequency band, is easily set with the MAX20078. Radio frequency interference is reduced while the spread-spectrum feature meets EMI standards.

Conclusion

We have reviewed the many challenges in powering complex LED lighting systems and the requirements for optimal LED system performance. We showed how the MAX20078 meets those challenges using a novel LED controller architecture that provides accurate average current control, high-frequency operation outside the AM radio band, good transient response for high-ratio dimming accuracy, and high efficiency for minimum power consumption. Individual diodes are switched in and out by the MAX20092 switch matrix manager, allowing pixel-level adaptive lighting. These features in turn enable superior lighting, which is not only more efficient, but supports complex light patterns and more accurately controls light intensity, direction, and focus.

Figure 14. Concert Stage with LED Lighting

Case Study III: Improve Matrix Lighting with the Next Generation of LED Buck Controllers

To meet time-to-market constraints and provide for efficient use of design resources, it is imperative that LED modules designed for a given complex light pattern be easily reconfigured for a new pattern (***Figure 14***).

The space challenge for matrix lighting requires more integration of the LED controller building blocks, while the reconfiguration needed for faster time-to-market requires an ability to communicate with the LED controller IC.

In this case study, we will show how to pack more functionality in a smaller PCB space while adding flexibility to matrix lighting.

Typical Highly Integrated Solution

Integrating two controllers into a single IC is a good first step in the direction of up-integration. ***Figure 15*** shows a typical dual-channel lighting implementation which uses nonsynchronous rectification. Unfortunately, in high-current applications, the use of nonsynchronous rectification and the selection of p-channel transistors and Schottky diodes leads to significant power inefficiencies.

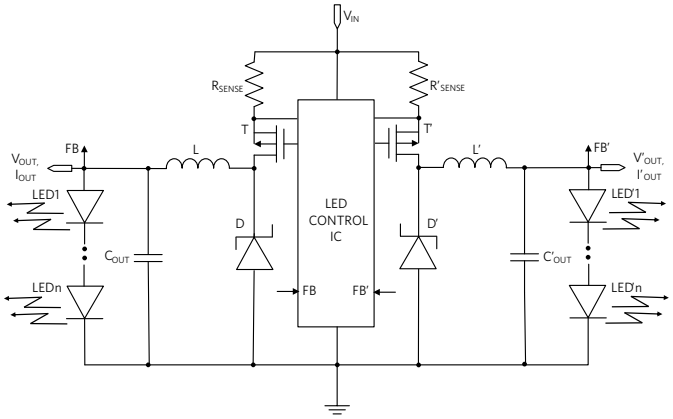

Figure 15. Typical Dual Controller Nonsynchronous Rectification Solution

In one possible nonsynchronous implementation, n-channel transistors can be used on the high side instead of p-channel transistors to recover some efficiency. However, this solution requires huge n-channel MOSFETs to compensate for the lossy Schottky diodes on the low side. The dual controller may also be housed in a bulky TSSOP package, further adding to the solution footprint. ***Figure 16*** shows a typical n-channel, nonsynchronous rectification solution that occupies a board area of 264mm^2.

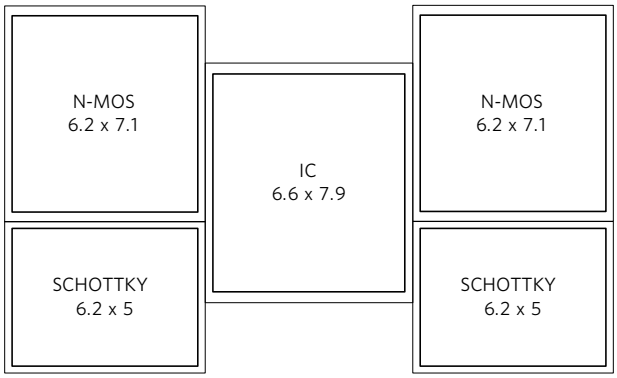

Figure 16. Nonsynchronous Rectification Solution Footprint (264mm^2)

The Synchronous Rectification Advantage

In a soluton with a 48V input and 12V output, the buck converter works with a duty cycle of about 25%. This means that the high-side transistor (T in *Figure 10*) conducts only 25% of the time. The external rectifier diode (D) conducts the remaining 75% of the time, which accounts for most of the power dissipation. On the other hand, if we utilize a synchronous architecture, the diode is replaced with a low-side MOSFET that acts as a synchronous rectifier. We can trade off the high drop across the diode with the low drop across the MOSFET transistor's on-resistance, $R_{DS(ON)}$. The MOSFET conduction loss can easily be one order of magnitude smaller than the Schottky power loss at full load. Clearly, the more logical way to minimize power dissipation is to use synchronous rectification.

A Synchronous High-Power Dual-Buck LED Driver Solution

The **MAX20096** synchronous, all n-channel buck LED controller with SPI interface shown in ***Figure 17*** (F^3 architecture), integrates two channels in a single IC, which reduces the BOM and solution footprint. Two out-of-phase channels smooth out the input current, spreading out its energy, resulting in lower RMS current and lower EMI emissions. With a lower RMS current, smaller and less expensive input capacitors can be used. A high, well-controlled switching frequency, outside the AM frequency band, reduces radio frequency interference and meets EMI standards. Fast transient response prevents output voltage and current fluctuations, which is consequent to instantaneous variation of the diode string length in high-ratio dimming applications. The device is ideal for matrix lighting and LED driver module (LDM) platforms.

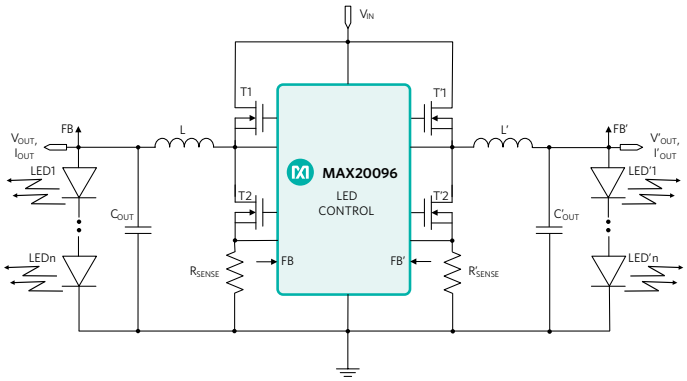

Figure 17. Synchronous High-Power Dual-Buck LED Controller

The utilization of an advanced silicon process allows the entire dual controller function to be housed in a small package. The elimination of the Schottky diode greatly reduces power losses in high-current applications, while allowing the use of smaller discrete MOSFETs (***Figure 18***).

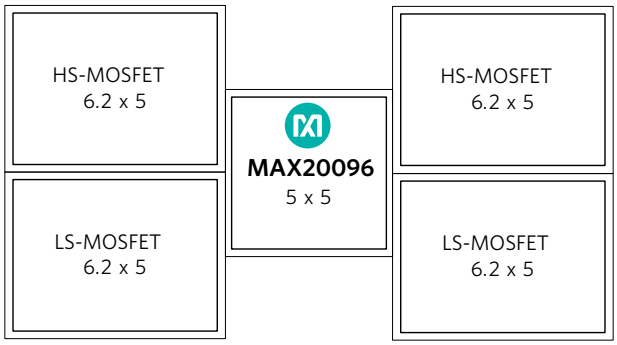

Figure 18. Synchronous Rectification Solution Footprint Using Smaller Discrete MOSFETs (149mm^2)

With synchronous rectification, the net solution size goes down from 264mm^2 to 149mm^2, a 43% reduction. Further system integration can be obtained by using dual MOSFET devices (HS- and LS-MOSFET integrated in a single package).

High Efficiency

Figure 19 shows the efficiency of an LED driver. Two synchronous rectification MOSFET transistors (HS 107mΩ, LS 58mΩ) in a small LFPACK56 package provide high efficiency over a wide range of load currents.

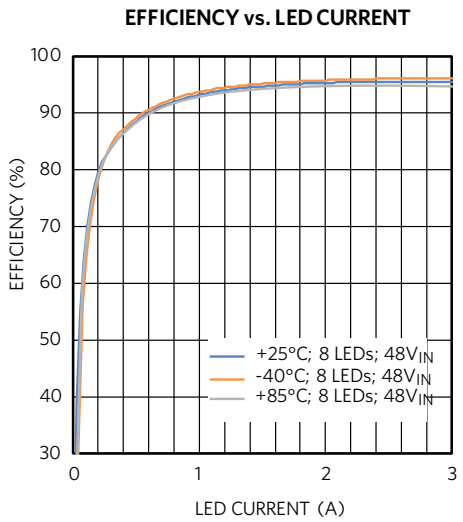

Figure 19. LED Driver Solution Efficiency vs. Load Current

Serial Peripheral Interface

The SPI interface allows flexibility and reuse of the LED lighting module since it is compatible with standard microcontrollers (µCs) from a variety of manufacturers. Dimming of the LED lights can be performed through SPI. Fault conditions, output currents/voltages on both channels and junction temperature can be read back through the SPI interface. In fail-safe mode, if SPI communication is cut, the device can still operate in analog mode.

Conclusion

In this case study, we showed how to pack more functionality in a smaller PCB space while adding flexibility to the next generation of LED controllers used in matrix lighting. The MAX20096 synchronous, n-channel, buck LED controller integrates two out-of-phase channels in a single IC reducing the BOM and PCB space occupancy. It also enables higher flexibility and reuse via its SPI interface. The simpler **MAX20097** addresses applications that do not require SPI communication.

Challenge 2
Low-/Mid-Power Lighting

Case Study IV: It's Time for a New Class of Flexible LED Drivers

LEDs have penetrated many lighting applications thanks to their versatility and efficiency. As an example, portable LED applications (*Figure 20*) must be small and efficient enough to fit in the existing space without overheating. With so many different functions, one might expect a lighting manufacturer to be resigned to keeping a large quantity of different LED drivers in stock. This can have severe implications in terms of reducing a manufacturer's purchasing power due to low volume orders, longer design cycles, and delayed time to market.

Is it possible to have an efficient, highly integrated LED driver that is flexible enough to cover the majority of applications? This case study reviews the power requirements of three classes of LED lighting applications and highlights the optimal LED driver topology for each case (buck, boost, buck-boost). It then introduces an innovative buck-derived solution that meets integration, efficiency, and flexibility challenges.

Figure 20. Outdoor LED Spotlight

Home Lighting Applications

Closet lights, shed lights, and other home applications require one or two LED diodes for operation and are often battery operated. For a typical LED diode that develops 3.5V at 1A, this type of application can be well served by a simple buck converter powered by a 9V battery. In ***Figure 21***, the buck-converter inductor current builds up when N1 is 'on' and is maintained 'on' through N2 when N1 is 'off.' Synchronous rectification accounts for the high efficiency.

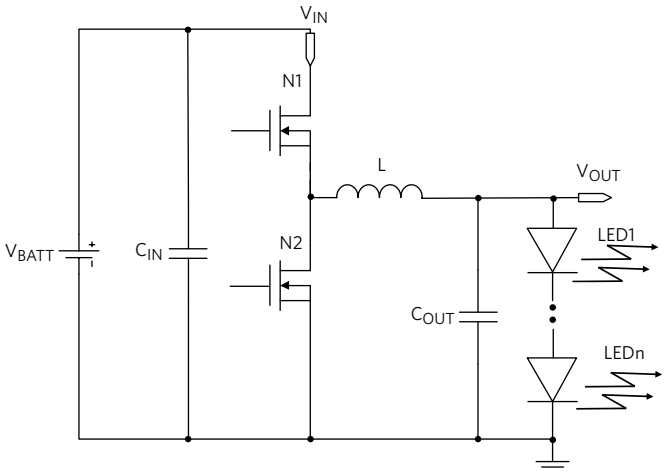

Figure 21. Buck Converter

Brighter home applications may require three or four LED lights to operate. Here, the voltage ranges from 10.5V to 14V. With a 9V battery, the best configuration for this type of application is a buck-boost converter. One example of a buck-derived buck-boost implementation is shown in ***Figure 22***. Notice how the output voltage is always below ground. The inductor builds up current when N1 is 'on' and is maintained through N2 when N1 is 'off.' The voltage across the inductor inverts at each transition, independently of the number of diodes. Accordingly, this configuration can operate with any number of diodes on the output, along with a string voltage drop that adds up to a value that is above or below the input voltage (buck-boost operation).

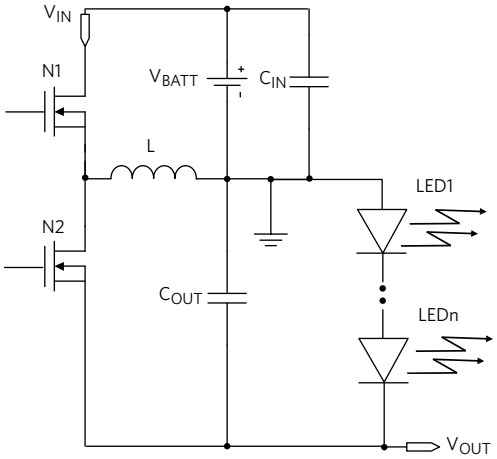

Figure 22. Buck-Boost Operation

The brightest applications may require long strings of diodes. In this case, the best configuration is the boost converter. In the buck-derived boost converter of ***Figure 23***, the output voltage floats below the input voltage. The inductor builds up current when N1 is 'on' and is mantained through N2 when N1 is 'off.' For the voltage across the inductor to invert at each transition, the number of diodes must be high enough so that the output voltage is negative with respect to ground. For this reason, the configuration can only operate with a high number of diodes in the string, in this case, 8 (28V string).

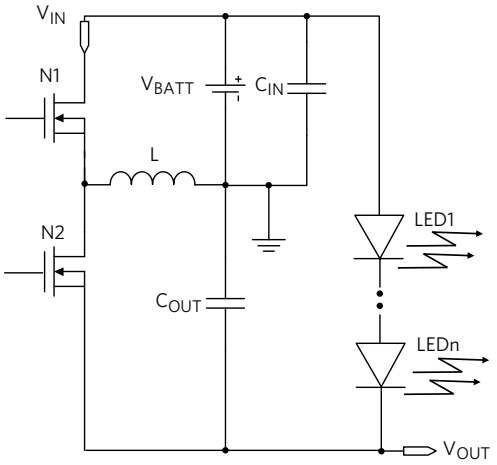

Figure 23. Boost Operation

A Catch-All Solution

Buck, boost, and buck-boost canonical implementations can be very different and are very difficult to reconcile in a single IC. However, in portable LED applications, it makes no difference where the string is voltage-referenced. This opens up an opportunity to adopt a buck-derived topology for both the buck-boost and boost converter. In the above three examples, the cathode of the LED's bottom diode is opportunistically referenced to ground (buck) or V_{OUT} (buck-boost and boost) while the anode of the LED's top diode is referenced to V_{OUT} (buck) or ground (buck-boost and boost). Indeed, it is possible in this application to have a single flexible topology for all cases, with minor adjustments to the IC and the application configuration.

Integrated, Flexible Solution

The **MAX25610A** in *Figure 24* is a fully synchronous LED driver that provides constant output current to drive high-power LEDs. The IC integrates two 60mΩ power MOSFETs for synchronous operation, high efficiency, and a minimum number of external components. Flexible configuration supports buck, inverting buck-boost, and boost conversion. The devices can operate in two modes. For buck mode, connect a 2.49kΩ resistor from V_{CC} to the PWMFRQ pin. For buck-boost or boost mode, connect a 17.8kΩ resistor from V_{CC} to the PWMFRQ pin.

The IC is offered in a 16-pin 5mm x 5mm SWTQFN and in a 5mm x 6.4mm TSSOP package.

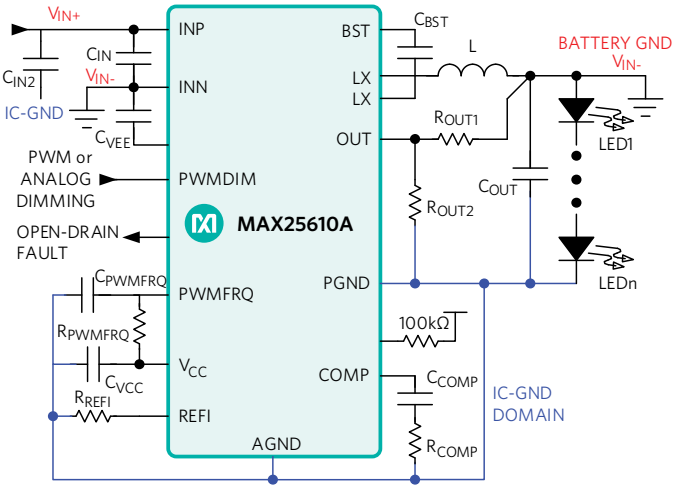

Figure 24. Integrated, Flexible Converter in Buck-Boost Mode

Flexible Dimming

The MAX25610A LED driver offers an analog dimming-control input pin (REFI) while the voltage at REFI sets the LED current level linearly from zero to the maximum when V_{REFI} = 1.3V.

In addition, the device offers PWM dimming. PWMDIM functions with either analog or PWM control signals. Once the internal pulse detector detects three successive edges of a PWM signal with a frequency, the device synchronizes to the external signal and pulse-width modulates the LED current at the external PWMDIM input frequency and duty cycle. If an analog control signal is applied to PWMDIM, the device compares the DC input to an internally generated 200Hz ramp to pulse-width modulate the LED current.

The integrated current-sense capability saves the device from using an external sense resistor, which reduces PCB space and cost.

Low EMI

Integrated MOSFETs allow for well-controlled transition fronts, minimizing EMI. Built-in spread spectrum allows for further EMI noise reduction.

Figure 25 reports the measurement standard CISPR 25, level 5 for Conducted Emissions (CE) in the 150kHz to 245MHz range.

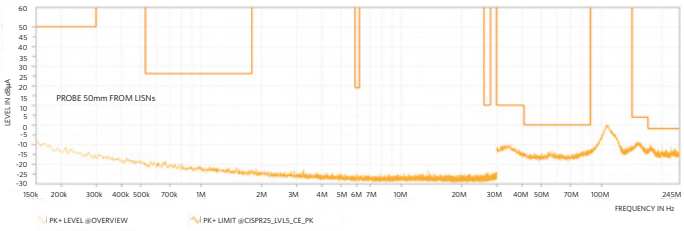

Figure 25. Peak EMI Conducted Emissions

Conclusion

The high number of portable LED applications creates space problems, requiring high integration and high efficiency. The wide variety of LED applications can also create other issues such as reduced purchasing power due to low volumes, longer design cycles, and longer time-to-market cycles. The MAX25610A is a flexible, highly integrated LED driver that can easily be configured to implement buck, buck-boost, and boost topologies, thereby covering a large class of LED applications. On-board power MOSFETs with low $R_{DS(ON)}$ support synchronous operation, reduce PCB space, and yield high efficiency for lower heat generation. This innovative LED driver IC solves the challenges of space, purchasing volumes, and cycle times.

Case Study V: Flexible LED Boost Controller Simplifies Low-Mid-Power LED Lighting Design

In low-mid-power lighting systems, complex implementations like the one in *Figure 2* can be reduced to a simple, single-chip boost converter solution. In the boost controller IC of ***Figure 26***, one of the three feedback loops (CURRENT LOOP) ensures tight control of the output current. The other two feedback loops perform overvoltage protection (OVP LOOP) and overcurrent protection (OCP LOOP) for a string of 12 diodes, which creates 42V across the string (3.5V per LED).

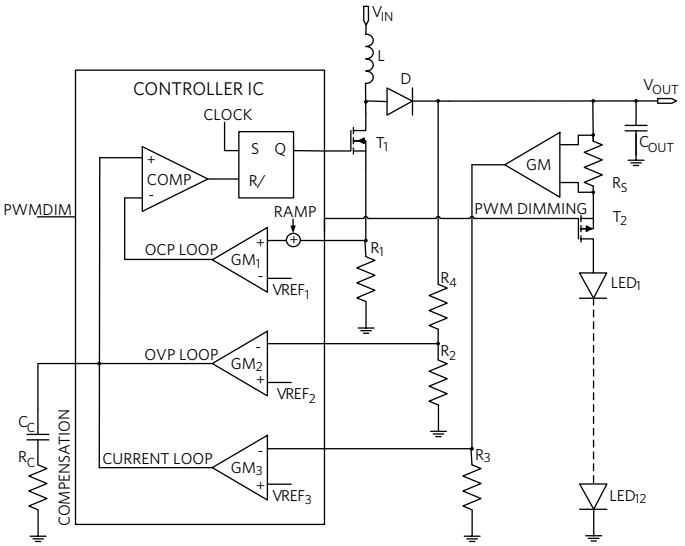

Figure 26. Typical Boost LED Control System

In addition to current and voltage control, the IC must be equipped with all the features previously described (dimming, spread spectrum, etc.). High-side current sensing (via the resistors R_3 and R_S) is required to protect the LED system in case of shorts from the output to the ground or battery input.

Flexible LED Controller Architecture

Ideally, an LED controller should have a flexible architecture that supports multiple configurations that implement different features. We have discussed the boost configuration, but we should also consider the buck-boost configuration. A buck-boost mode configuration is necessary if the diode string is short, for example two or three LEDs (7V or 10.5V), against a battery voltage that can vary from less than 6V (cold crank) up to 16V. If the concern is input-to-output isolation, then a SEPIC (discontinuous output current) or a Chuck (continuous output current) converter may be the right solution. A single controller that supports many architectures has clear advantages of economies of scale and ease of reuse.

The **MAX20090** (***Figure 27***) is the most flexible boost-derived controller for driving LEDs, allowing boost, high-side buck, SEPIC mode, or buck-boost mode configurations. The device is a single-channel HB LED controller. The HB LED controller can accept a 5V to 65V input voltage and drives a string of LEDs with a 65V maximum output voltage. The PWM input provides LED dimming ratios of up to 1000:1 and the ICTRL input provides additional analog-dimming capability.

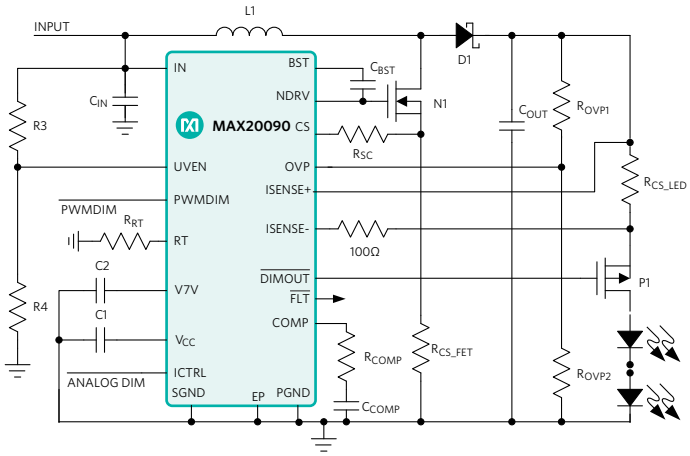

Figure 27. MAX20090 Boost LED System

Low EMI and Low Noise

A 200kHz to 2.2MHz programmable switching frequency allows the MAX20090 to operate well outside the AM radio frequency band, avoiding interference with the radio signal. Built-in spread-spectrum modulation also improves electromagnetic compatibility performance. Spread-spectrum dithering is added to the oscillator to alleviate EMI problems in the LED controller. The boost converter oscillator (RT pin in *Figure 28*) is synchronized to the positive-going edge of the PWM dimming pulse (PWMDIM). This means that the NDRV pulse goes high at the same time as the positive-going pulse on PWMDIM (see *Figure 28*). Synchronizing the RT oscillator to the PWMDIM pulse guarantees that the switching-frequency variation over a period of a PWMDIM pulse is the same from one PWMDIM pulse to the next. This prevents flickering during PWM dimming when spread spectrum is added to the RT oscillator.

Case VI: Flexible, High-Dimming Ratio Automotive LED Driver Improves Automotive LED Lighting

An LED driver IC for automotive applications must be flexible, implementing multiple functions like high beam, low beam, fog lights, daytime running lights (DRLs), position, and turn-signal lights. It must have a high dimming ratio in applications like head-up displays (HUDs), in order to produce a clear image in bright sunlight and a subdued image that will not obscure a driver's vision at night (***Figure 28***). It must also be robust enough to withstand the transient high-voltage dump produced by an automobile battery.

Figure 28. Modern Low Beam with DRL

Dimming

Dimming is a ubiquitous function in many automotive lighting applications and an important safety feature for LED headlights. The human eye can barely detect light dimming from 100% to 50%. Dimming must go down to at least 1% or less to be clearly discernable. Head-up displays in particular (***Figure 29***), need a high dimming ratio to produce a clear image in bright sunlight and a subdued image that will not obscure the driver's vision at night. With this in mind, it's not surprising that dimming is specified by a ratio of 5000:1 or higher. Given that the human eye, under proper conditions, can sense a single photon, there is practically no limit to this function.

Figure 29. Car Equipped with HUD display

Since current must be kept constant to preserve color, the best dimming strategy for LEDs is PWM (pulse-width modulation), where the light intensity is modulated by time-slicing the current rather than by changing the amplitude. The PWM frequency must be kept above 100Hz to prevent the LED from flickering.

With PWM dimming, the limit to the minimum LED "on/off" time is the time it takes to ramp up/down the current in the switching regulator inductor. This may add up to tens of microseconds of response time, which is too slow for LED headlight cluster applications that require fast and complex dimming patterns. Dimming in this case can only be performed by individually switching on/off each LED in a string by means of dedicated MOSFET switches. The challenge for the current control loop is to be fast enough to quickly recover from the output voltage transient due to switching in and out of the diodes.

Flexible LED Controller Architecture

Ideally, an LED controller should have a flexible architecture that supports multiple configurations that can implement different features. We have discussed the boost configuration, but we should also consider the buck-boost configuration. A buck-boost mode configuration is necessary if the diode string is short, for example, two or three LEDs (7V or 10.5V) against a battery voltage that can vary from less than 6V (cold crank) up to 16V. If the concern is input-to-output isolation, then a SEPIC (discontinuous output current) or a Cuk (continuous output current) converter may be the right solution. A single controller that supports many architectures has clear advantages of economies of scale and ease of reuse.

High Dimming Ratio Controller

As an example, the single-channel HB LED driver shown in Figure 30 is used for automotive front-light applications such as high beam, low beam, daytime running light (DRL), turn indicator, fog light, and other LED lights. It can take an input voltage from 5V to 36V and drive a string of LEDs with a maximum output voltage of 65V.

This 36V LED driver IC offers the most flexible schemes for driving LEDs, allowing either boost, high-side buck, SEPIC mode, or buck-boost mode configurations. The PWM input provides LED dimming ratios of up to 5000:1, and the REFI input provides additional analog dimming capability. The IC has built-in spread-spectrum modulation for improved electromagnetic compatibility performance. The IC can also be used in zeta and Ćuk converter configurations.

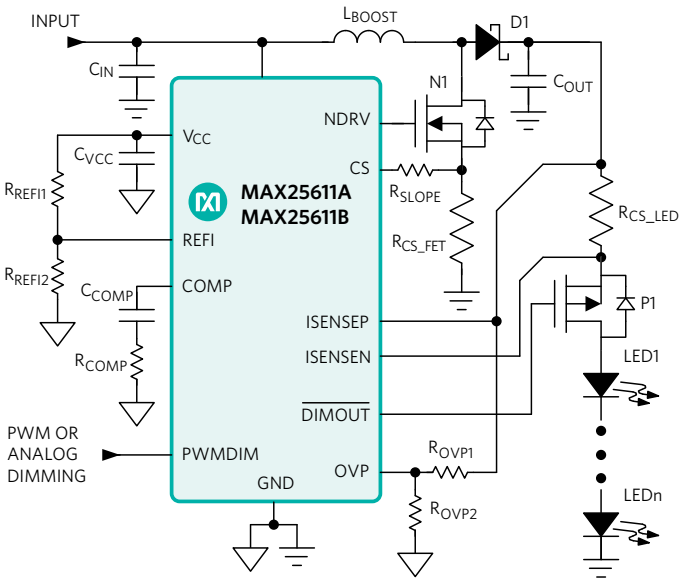

Figure 30. Boost LED Application Diagram

For high-efficiency applications, the switching frequency is internally set at 350kHz with the A version. For applications favoring small passives and small PCB size, the B version's frequency is set at 2.2MHz. The IC is housed in a small 4mm x 4mm 12-pin SWTQFN-EP package with exposed pad for best head dissipation.

Challenge 3
Infrared Diode for Vision Systems

Case Study VII: IR Camera for Machine Vision

Machine vision is an important tool for Industry 4.0. Infrared (IR) cameras utilize an IR LED in combination with a photo sensor and are critical components of machine vision, which is used to measure and count products, calculate product weight or volume, and inspect goods at top speed with respect to predefined characteristics. IR machine vision lighting enables industrial vision systems to recognize objects and their condition under difficult lighting conditions such as reflective surfaces that produce high levels of visible-spectrum noise, high or low levels of illumination, or target areas with variable light intensities.

All these functions and their associated electronics must fit seamlessly inside a robot, creating the need for flexible, small, and efficient solutions. They must also cope with harsh industrial electrical environments (***Figure 31***). In this section, we review an IR camera system and discuss the shortcomings of a typical IR-LED driver implementation. Subsequently, we present a flexible, compact, and efficient IR LED driver IC that overcomes these shortcomings.

Figure 31. Machine Vision in the Smart Factory

Infrared Camera

Some key advantages of IR light are its invisibility to the human eye and its ability to work day and night. ***Figure 32*** shows the main elements of an infrared camera. The IR LED illuminates the target. The reflected light is collected by the image sensor (CCD or CMOS photo diode) and processed by the vision processor to determine the response to the situation at hand.

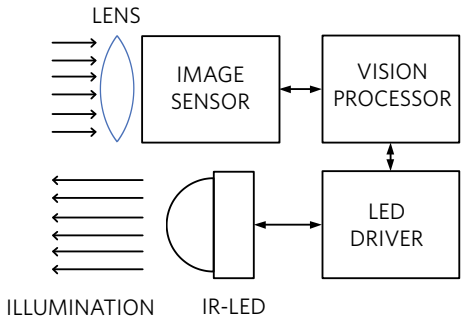

Figure 32. IR LED Camera for Vision Systems

Buck LED Driver for an IR Camera

The LED driver controls the IR light intensity and strobes it at the right frequency and duty cycle. Ideally, it must work off a low-voltage DC rail and cope with a harsh industrial environment.

The industrial environment is subject to electromagnetic interference (EMI) due to both external and internal sources. The "arc and spark" noise that comes from soldering components, motors, and similar pulse-type systems affects the supply voltage rails by producing disruptive undervoltages or overvoltages. The IR LED buck converter, despite its fast switching waveforms, should mitigate any contribution to this noisy environment.

Typical High-Power Buck IR LED Driver Solution

A typical buck IR LED driver solution is shown in ***Figure 33***. It utilizes an n-channel transistor (typical $R_{DS(ON)}$ = 0.3Ω), and a nonsynchronous architecture that relies on the Schottky diode D for current recirculation. The latter is a sure sign of an inefficient implementation.

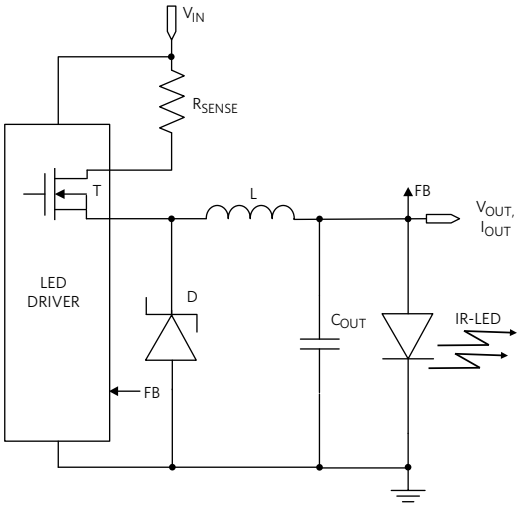

Figure 33. Typical Nonsynchronous Buck IR LED Driver

Consider the typical case in which the input voltage is the common 12V and the output is the forward voltage of an IR LED diode (2.4V at 1A). Here, the buck converter duty cycle is only 20%. This means that the MOSFET in *Figure 3* only conducts for 20% of the time (0.3Ω at 1A = 0.3W), while the Schottky (0.5V at 1A = 0.5W) conducts for 80% of the time. The total power dissipated in the power train is 0.46W, mostly due to the Schottky diode. After accounting for switching and other losses, this solution barely reaches an efficiency of 80%.

Integrated Synchronous Rectification Solution

As an example, the **MAX20050** synchronous buck LED driver is an ideal solution (*Figure 34*).

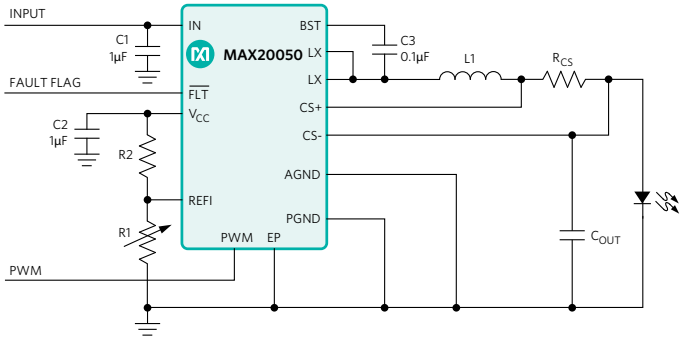

Figure 34. IR LED Driver Integrated, Synchronous Solution

The device includes a unique spread-spectrum mode that reduces EMI at the switching frequency and its harmonics.

Figure 35 reports the measurement standard CISPR 25, level 5 for Conducted Emissions (CE) in the 15MHz to 108MHz range.

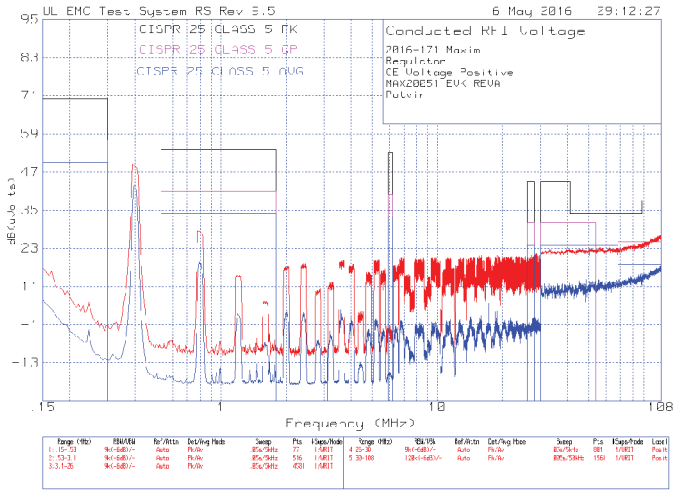

Figure 35. Conducted Emissions

With its 4.5V to 65V input supply range, the IC can be easily powered by a wide range of available DC rails and withstands the harsh industrial environment.

High Efficiency

The fully synchronous, 2A step-down converter integrates two low $R_{DS(ON)}$ 0.14Ω (typ) n-channel MOSFETs, assuring minimum Ohmic losses. Here, 0.14Ω $R_{DS(ON)}$ resistances will produce losses of only 140mW, one third of the previous case. This solution can easily achieve high efficiency. In *Figure 36*, the synchronous solution achieves peak efficiency of 86% at 2.1MHz and 92% at 400kHz! Increasing the frequency to 2.1MHz reduces the BOM size at the expense of a few percentage points of efficiency while avoiding interference within the AM band.

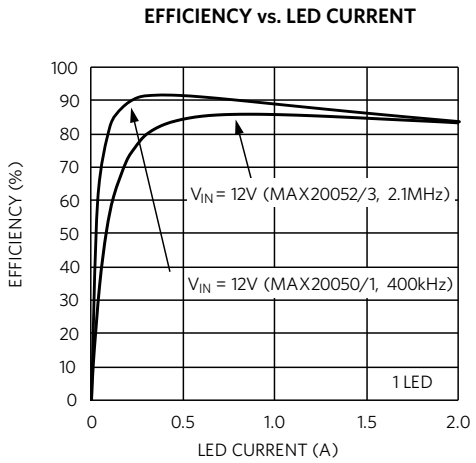

Figure 36. Efficiency vs. Size Tradeoff

Small Size

The high level of integration of this solution yields minimal PCB area occupation. *Figure 37* shows a nonsynchronous buck converter IC requiring an external Schottky diode that occupies a PCB area almost double (+78%) that of the single-chip solution.

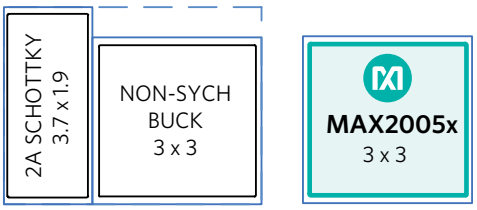

Figure 37. Size Comparison of Nonsynchronous vs. Synchronous Buck ICs

Flexibility

For maximum flexibility, a family of IR LED drivers (Table 2) offers two operation frequencies to address efficiency-vs-size tradeoffs and internal-vs-external loop compensation for dynamic response optimization.

Table 2. IR LED Drivers Family

IR LED Drivers	Switching Frequency	Loop Compensation
MAX20050	400kHz	Internal
MAX20051	400kHz	External
MAX20052	2.1MHz	Internal
MAX20053	2.1MHz	External

These IR LED devices are specified for operation over the full -40°C to +125°C temperature range and are available in thermally enhanced 12-pin (3mm x 3mm) TDFN and 14-pin (5mm x 4.4mm) TSSOP packages with an exposed pad.

For higher power, the MAX20078 synchronous buck LED controller can be utilized. For higher voltage applications, the MAX20090 high-voltage HB LED controller is an excellent choice.

Conclusion

Machine vision systems are a staple of the modern factory. Their infrared cameras must fit seamlessly within the robotic electronic system, creating the need for flexible, small, and efficient solutions. They must also cope with harsh industrial environments. We reviewed the IR camera system and discussed the shortcomings of a typical solution. Finally, we presented an IR LED driver IC that is flexible, compact, efficient, and has low EMI.

Challenge 4
Low-Power LED Lighting

Case Study VIII: Small Lights

Many line-powered home and building applications require less power and are handled by simple single-function ICs. Here, the MAX20090 can be utilized as a boost LED controller for long strings that require voltages above the nominal power brick or battery voltage, or as a front-end boost voltage regulator. The MAX20050 buck converter can also drive short strings of diodes that are connected to the battery or to a low-voltage power brick. Alternatively, it can drive long strings of diodes with the help of a front-end boost converter.

For noise-sensitive applications, a linear LED driver can be utilized. The MAX16823 three-channel LED driver (*Figure 38*) operates from a 5.5V to 40V input voltage range and delivers up to 100mA per channel to one or more strings of HB LEDs. Each channel's current is programmable using an external current-sense resistor in series with the LEDs. Three DIM inputs allow a wide range of independent pulsed dimming in addition to providing the on and off control of the outputs. Wave-shaping circuitry reduces EMI while providing fast turn-on and turn-off times.

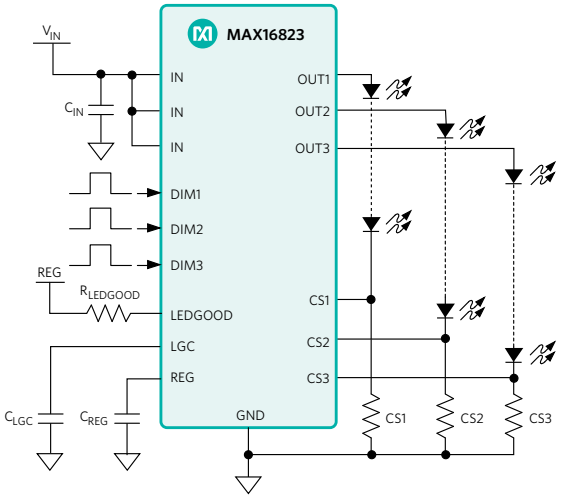

Figure 38. Linear Driver for Low Noise

Summary

Table 3 is a summary of LED driver applications and their proposed product solutions. The block diagram in *Figure 39* shows Maxim's LED drivers by application.

Table 3. General Lighting LED Drivers

Application	Function	Product
High-Power LED Lighting	36V, 2.5MHz Boost/SEPIC Controllers	MAX16990/MAX16992
	Synchronous High-Power Buck LED Controller	MAX20078
	Synchronous High-Power Dual-Buck LED Controller	MAX20096/MAX20097
	12-Switch Matrix Manager LED Lighting	MAX20092
	Buck-Boost	MAX25600
Low-Mid-Power LED Lighting	High-Voltage HB Boost LED Controller	MAX20090
	2A Synchronous Buck LED Drivers with Integrated MOSFETs	MAX20050/51/52/53
	Buck-Boost	MAX25610
IR LEDs for Vision Systems	2A Synchronous Buck LED Drivers with Integrated MOSFETs	MAX20050/51/52/53
	Synchronous High-Power Buck LED Controller	MAX20078
	High-Voltage HB Boost LED Controller	MAX20090
	Buck-Boost	MAX25611
Low-Power LED Lighting	High-Voltage, Linear HB LED Driver with Open LED Detection	MAX16839
	High-Voltage, 3-Channel Linear HB LED Driver with Open LED Detection	MAX16823/24/25

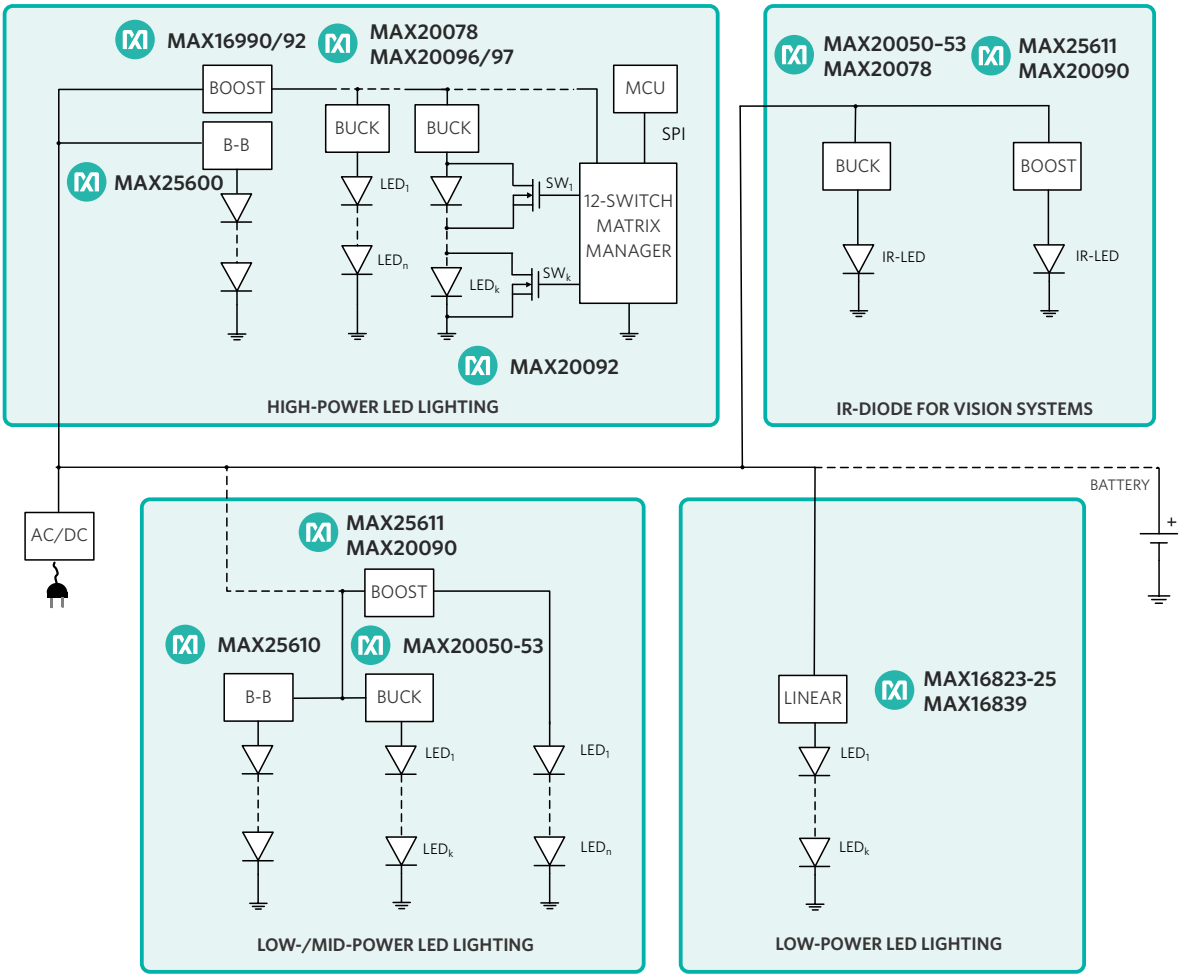

Figure 39. LED Drivers by Application

Conclusion

The proliferation of LED modules in general lighting applications places new requirements on system hardware including: reduced component size to fit additional electronics in the same space, improved energy efficiency to perform within the same or lower thermal budget, connected and flexible architectures that support multiple configurations, and accurate control that preserves LED light characteristics.

In this design guide, we discussed eight case studies that address the challenges in high-power and low-/mid-power lighting, IR cameras used in vision systems, and low-power lighting. In each case, we proposed the best solution based on the application at hand.

Glossary

AM Broadcasting Band (LF): Radio frequencies in the range of 148.5kHz to 283.5kHz.

AM Broadcasting Band (MF): Radio frequencies in the range of 525kHz to 1705kHz

Power Brick: An AC/DC or DC/DC power converter that adheres to standard sizes and footprints set by the Distributed-Power Open Systems Alliance (DOSA)

BOM: Bill of materials

EMI: Electromagnetic interference

IR: Infrared

LED: Light-emitting diode

PWM: Pulse-width modulation

RMS: Root-mean-square

SEPIC: Single-ended primary inductance converter

SPI: Serial peripheral interface

SW: Side-wettable

Product Selector Table

LED Drivers for General Lighting

Part No.	Max. No. of LEDs	LED Channels	LED Configuration	I_{LED} per Channel (max) (A)	V_{IN} (min) (V)	V_{IN} (max) (V)	I_{CC} (max) (mA)	LED String Voltage (max) (V)	Oper. Freq (kHz)	Package-Pins
MAX16803	10	1	Series	0.35	6.5	40	3	38.6	—	TQFN-16
MAX16815	10	1	Series	0.1	6.5	40	2	38.6	—	SOIC-8, TDFN-EP-6
MAX16822A	15	1	Series	0.5	6.5	65	1.5	63	2000	SOIC(N)-8
MAX16823	10	3	Series-Parallel	0.1	5.5	40	3	39.1	—	TQFN-16, TSSOP-16
MAX16824	9	3	Series-Parallel	0.15	6.5	28	10	38.6	—	TSSOP-16
MAX16832	15	1	Series	1	6.5	65	1.5	63	2000	SOIC-8
MAX16833	15	1	Series	10	5	65	2.5	65	1000	TSSOP-16
MAX16834	40	1	Series	10	4.75	28	6	250	1000	QFND-20, TQFN-20, TSSOP-20
MAX16839	10	1	Series	0.1	5	40	10	39.1	—	SOIC-8, TDFN-EP-6
MAX16990	—	—	—	6	4.5	36	7	—	100kHz to 1MHz	TQFN-12, µMAX-10
MAX16992	—	—	—	6	4.5	36	7	—	1MHz to 2.5MHz	TQFN-12, µMAX-10
MAX20050	15	1	Series	2	4.5	65	10	60	400	TDFN-12
MAX20051	15	1	Series	2	4.5	65	10	60	400	TSSOP-CU-14, TSSOP-14
MAX20052	15	1	Series	2	4.5	65	10	60	2100	TDFN-12
MAX20053	15	1	Series	2	4.5	65	10	60	2100	TSSOP-CU-14, TSSOP-14
MAX20078	15	1	Series	30	4.5	65	50	60	100, 250, 262, 300, 500, 700, 750, 1000	TQFN-CU-16, TQFN-16, TSSOP-CU-16
MAX20090	15	1	Series	3	5	65	5	60	250, 262, 300, 500, 750, 1000, 1200, 1500, 2000, 2100	TQFN-CU-20, TQFN-20, TSSOP-CU-20
MAX20092	12	12	Series-Parallel	1.5	4.5	5.5	1.3	56	—	TQFN-CU-32

Note:
1. All parts operate at -40°C to +125°C temperature range.

Product Selector Table (continued)

LED Drivers for General Lighting

Part No.	Max. No. of LEDs	LED Channels	LED Configuration	I_{LED} per Channel (max) (A)	V_{IN} (min) (V)	V_{IN} (max) (V)	I_{CC} (max) (mA)	LED String Voltage (max) (V)	Oper. Freq (kHz)	Package-Pins
MAX20096	15	2	Series	30	4.5	65	10	60	100, 250, 262, 300, 500, 700, 750, 1000	TQFN-CU-32
MAX20097	15	2	Series	30	4.5	65	10	60	100, 250, 262, 300, 500, 700, 750, 1000	TSSOP-CU-28
MAX25600	15	1	Series	10	5	60	6	60	200kHz to 700kHz	TSSOP-28, TQFN-28
MAX25610A	8	1	Series	3	5	36	7	32	400kHz	TSSOP-16, TQFN-16
MAX25610B	8	1	Series	3	5	36	7	32	2.2 MHz	TSSOP-16, TQFN-16
MAX25611A	15	1	Series	1	5	36	7	65	350kHz	TQFN-CU/12 TSSOP-CU/12
MAX25611B	15	1	Series	1	5	36	7	65	2.2MHz	TQFN-CU/12 TSSOP-CU/12

Note:
1. All parts operate at -40°C to +125°C temperature range.

Related Resources

Web Pages

LED Driver ICS

Design Solutions

Achieve Superior Automotive Exterior Lighting with a High-Power Buck LED Controller

Improve Matrix Lighting with the Next Generation of LED Controllers and Switches

Driver Monitoring Systems Need a New Breed of IR-LED Drivers

Time for a New Class of Flexible Automotive LED Drivers

Learn more

For more information, visit:
www.maximintegrated.com/led-drivers

Rev 0; August 2019